Style

Code	Description
V	Valve
VP	Valve, Padlocking Handle

Tube Variations

Code	Description
500	Female/Female NPT Ports
502*	Female/Female Panel Mount

* 502 Panel mount is only available in sizes 20 – 32.

CS
Material

Code	Description
CS	Carbon Steel

Size

Code	Size
4	1/4" NPT
6	3/8" NPT
8	1/2" NPT
12	3/4" NPT
16	1" NPT
20	1 1/4" NPT
24	1 1/2" NPT
32	2" NPT

Design Series
NOTE:
Not required when ordering.

Model V500CS and VP500CS

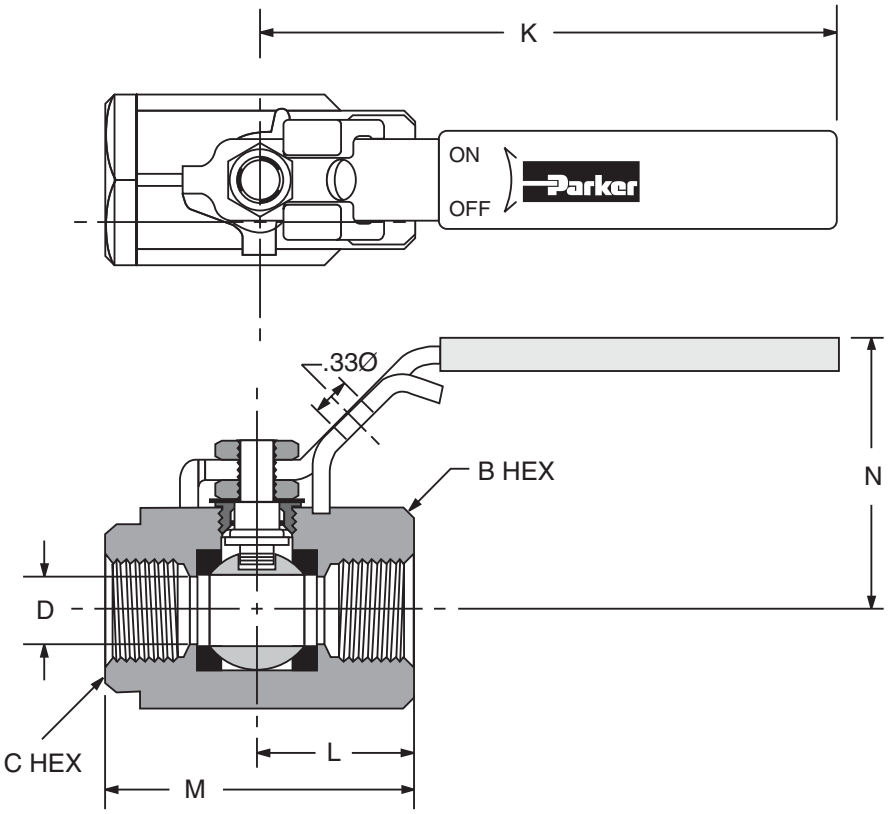

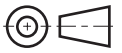

Part Number	Pipe Thread	B Hex	C Hex	Dimensions mm (in) K	L	M	N	D Flow Ø
Female-Female Pipe Ends V500CS								
V500CS4	1/4"	1-1/16"	15/16"	96.0 (3.78)	25.4 (1.00)	50.8 (2.00)	41.4 (1.63)	10.2 (0.400)
V500CS6	3/8"	1-1/16"	15/16"	96.0 (3.78)	25.4 (1.00)	50.8 (2.00)	41.4 (1.63)	10.2 (0.400)
V500CS8	1/2"	1-1/4"	1-1/16"	96.0 (3.78)	31.8 (1.25)	60.2 (2.37)	43.9 (1.73)	13.7 (0.540)
V500CS12	3/4"	1-5/8"	1-3/8"	129.5 (5.10)	38.1 (1.50)	73.7 (2.90)	52.8 (2.08)	17.3 (0.680)
V500CS16	1"	2"	1-5/8"	129.5 (5.10)	44.7 (1.76)	86.6 (3.41)	58.4 (2.30)	22.4 (0.880)
Locking Handle, Female Pipe Ends VP500CS (Shown above)								
VP500CS4	1/4"	1-1/16"	15/16"	104.9 (4.13)	25.4 (1.00)	50.8 (2.00)	56.6 (2.23)	10.2 (0.400)
VP500CS6	3/8"	1-1/16"	15/16"	104.9 (4.13)	25.4 (1.00)	50.8 (2.00)	56.6 (2.23)	10.2 (0.400)
VP500CS8	1/2"	1-1/4"	1-1/16"	104.9 (4.13)	31.8 (1.25)	60.2 (2.37)	56.6 (2.23)	13.7 (0.540)
VP500CS12	3/4"	1-5/8"	1-3/8"	127.0 (5.00)	38.1 (1.50)	73.7 (2.90)	71.1 (2.80)	17.3 (0.680)
VP500CS16	1"	2"	1-5/8"	127.0 (5.00)	44.7 (1.76)	86.6 (3.41)	75.4 (2.97)	22.4 (0.880)

Model V502CS and VP502CS

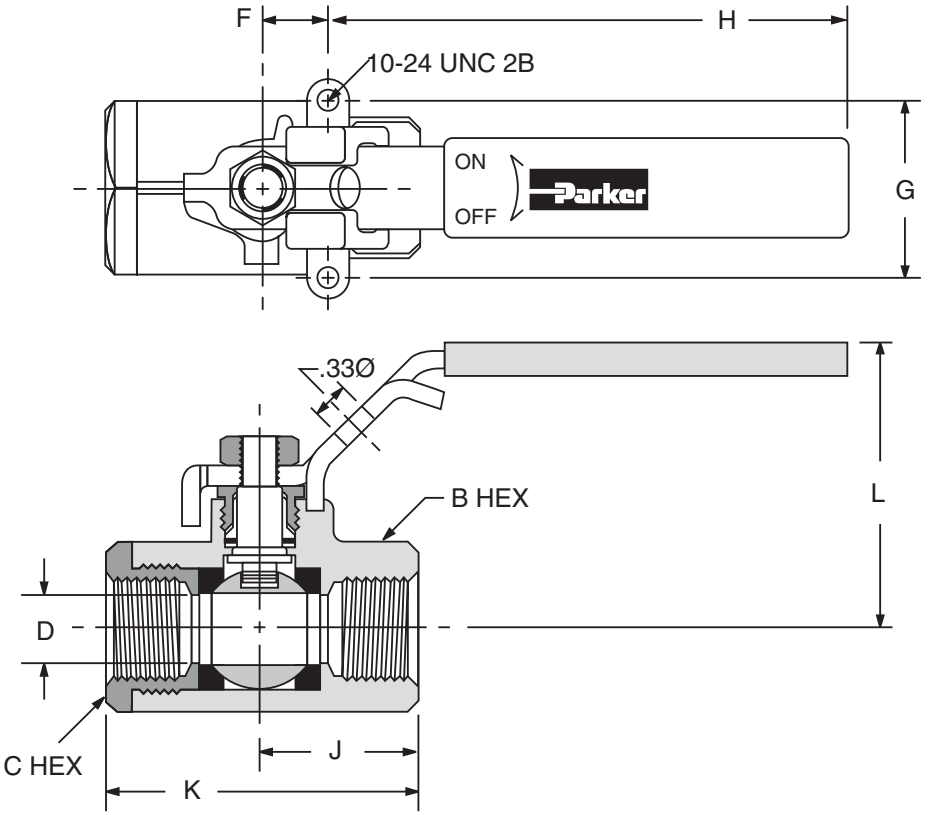

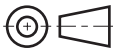

Part Number	Pipe Thread	B Hex	C Hex	Dimensions mm (in)						D Flow Ø
				F	G	H	J	K	L	
Female-Female Pipe Ends, Panel Mount V502CS										
V502CS20	1-1/4"	2"	2-1/4"	23.9 (0.94)	38.1 (1.50)	154.9 (6.10)	47.5 (1.87)	96.5 (3.80)	70.1 (2.76)	25.4 (1.000)
V502CS24	1-1/2"	2-5/16"	2-1/2"	23.9 (0.94)	38.1 (1.50)	154.9 (6.10)	57.7 (2.27)	115.6 (4.55)	75.7 (2.98)	31.8 (1.250)
V502CS32	2"	2-3/4"	3"	26.2 (1.03)	50.8 (2.00)	218.4 (8.60)	61.5 (2.42)	122.7 (4.83)	89.9 (3.54)	38.1 (1.500)
Locking Handle, Female Pipe Ends, Panel Mount VP502CS (Shown above)										
VP502CS20	1-1/4"	2"	2-1/4"	23.9 (0.94)	38.1 (1.50)	190.5 (7.50)	47.5 (1.87)	96.5 (3.80)	80.0 (3.15)	25.4 (1.000)
VP502CS24	1-1/2"	2-5/16"	2-1/2"	23.9 (0.94)	38.1 (1.50)	190.5 (7.50)	57.7 (2.27)	115.6 (4.55)	85.6 (3.37)	31.8 (1.250)
VP502CS32	2"	2-3/4"	3"	26.2 (1.03)	50.8 (2.00)	222.3 (8.75)	61.5 (2.42)	122.7 (4.83)	87.9 (3.46)	38.1 (1.500)

General Description

Series 50*SS low pressure, stainless steel ball valves provide total shut-off capability for services up to 138 Bar (2000 PSI).

Operation

A quarter turn of the handle is on or off. Ball Valves are not intended for use as a throttling valve. Attempting to use it in these applications may result in premature seal failure and/or inability to turn the valve handle.

Features

- Ball valve bodies are machined from CF-8M stainless steel castings, equivalent of 316 stainless steel which is suited for corrosive environments.
- Highly inert PTFE seats and seals provide resistance to chemical corrosion.
- Blowout proof stem design, 316 stainless ball and a special design handle enable increased turn and leverage for ease of opening and closing.
- Padlocking handle option provides lock-out capability where required.
- Style 502 allows panel mounting for installation flexibility.

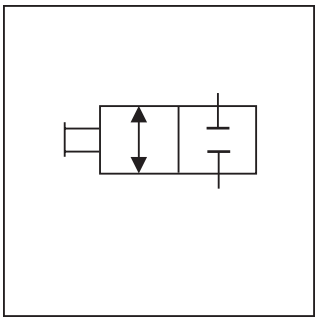

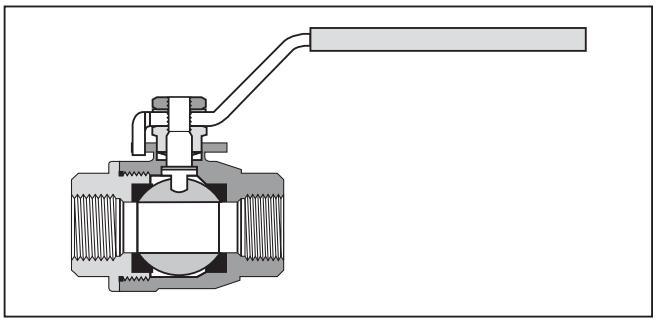

Specifications

Maximum Working Pressure	Sizes 1/4" - 1" 138 Bar (2000 PSI) Sizes 1 1/4" - 2" 103 Bar (1500 PSI) Saturated Steam up to 10 Bar (150 PSI) and 177°C (350°F) Vacuum service to 29 in. Hg
Body Material	CF-8M Stainless Steel 316 SS Cast Equivalent
Ball Material	Stainless Steel

Performance Curves

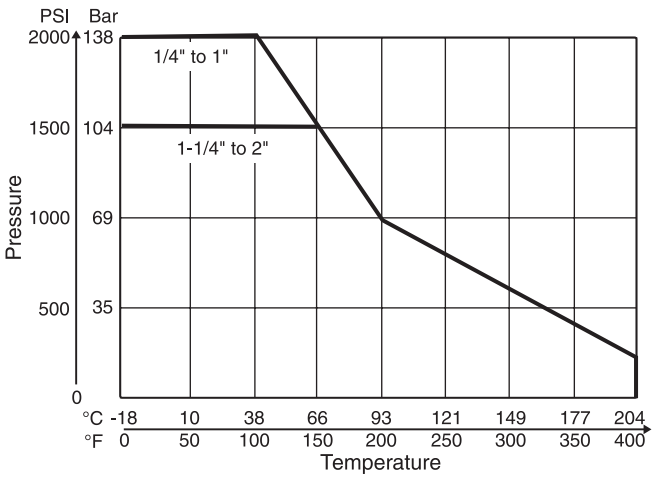

Flow Data

Type 501SS		Type 502SS	
Valve Size	**C_v**	**Valve Size**	**C_v**
1/4"	4.0	1/4"	4.0
3/8"	6.0	3/8"	6.0
1/2"	14.0	1/2"	14.0
3/4"	35.0	3/4"	35.0
1"	54.0	1"	54.0
		1-1/4"	74.0
		1-1/2"	120.0
		2"	226.0

Style

Code	Description
V	Valve
VP*	Valve, Locking Handle

* Locking handle style is only available in 502 series.

Type

Code	Description
501	Male/Female NPT Ports
502	Female/Female NPT Ports Panel Mount

Material

Code	Description
SS	Stainless Steel

Size *

Description			
501	502	Code	Size
Y	Y	4	1/4" NPT
Y	Y	6	3/8" NPT
Y	Y	8	1/2" NPT
Y	Y	12	3/4" NPT
Y	Y	16	1" NPT
N	Y	20	1 1/4" NPT
N	Y	24	1 1/2" NPT
N	Y	32	2" NPT

*Note: Y = Yes, it is available in this type
N = Not available in this type

Design Series
NOTE: Not required when ordering.

Mounting Detail

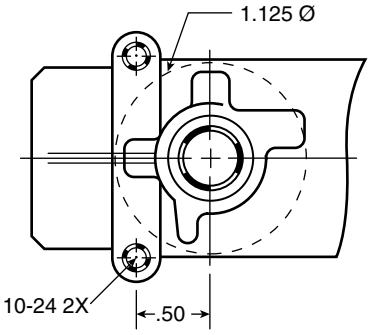

Model V501SS

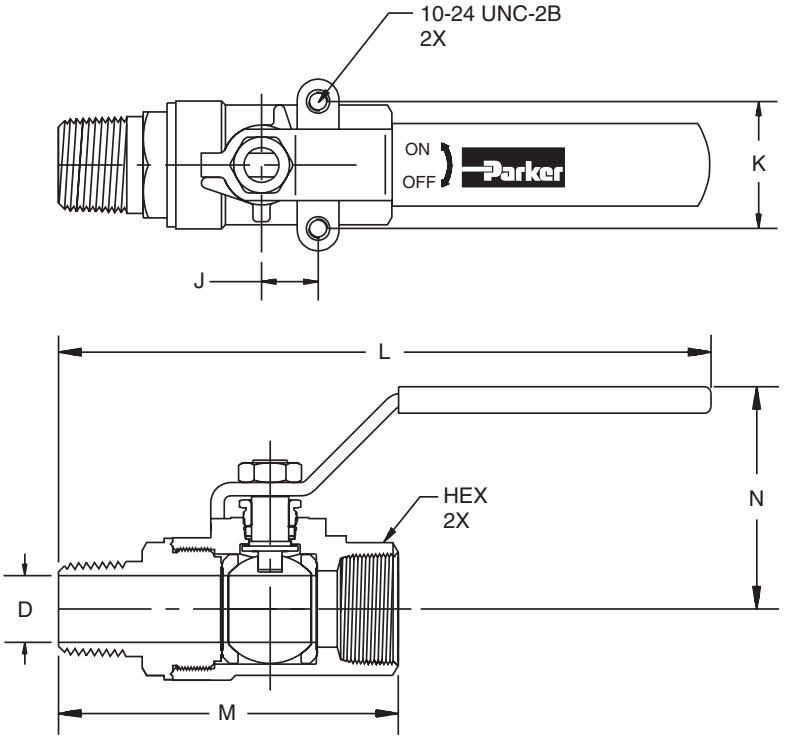

Part Number	Pipe Thread	Hex	Dimensions mm (in)					D Flow Ø
			J	K	L	M	N	
Male-Female Pipe Ends V501SS								
V501SS4	1/4"	15/16"	12.7 (0.50)	28.4 (1.12)	142.2 (5.60)	67.3 (2.65)	50.0 (1.97)	7.1 (0.280)
V501SS6	3/8"	15/16"	12.7 (0.50)	28.4 (1.12)	142.2 (5.60)	67.3 (2.65)	50.0 (1.97)	9.5 (0.375)
V501SS8	1/2"	1-1/16"	12.7 (0.50)	28.4 (1.12)	148.6 (5.85)	77.5 (3.05)	50.8 (2.00)	12.7 (0.500)
V501SS12	3/4"	1-3/8"	22.4 (0.88)	34.8 (1.37)	184.7 (7.27)	97.8 (3.85)	64.8 (2.55)	18.3 (0.720)
V501SS16	1"	1-5/8"	22.4 (0.88)	34.8 (1.37)	190.0 (7.48)	108.0 (4.25)	68.1 (2.68)	23.9 (0.940)

Model V502SS and VP502SS

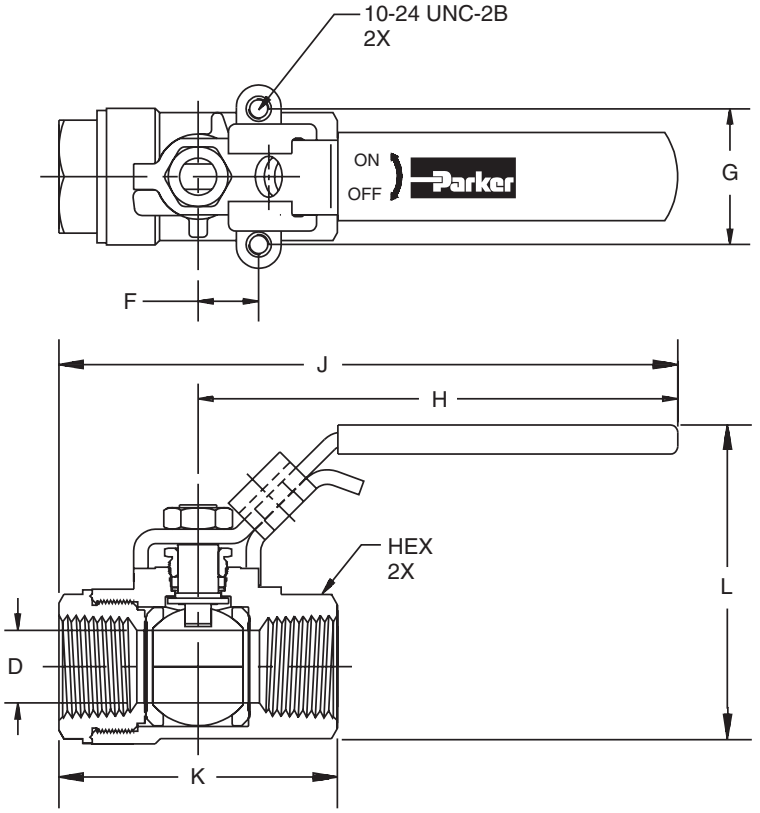

Part Number	Pipe Thread	Hex	Dimensions mm (in)						D Flow Ø	Panel Mount Thread
			F	G	H	J	K	L		
Female to Female Panel Mount										
V*502SS4	1/4"	15/16"	12.7 (0.50)	28.6 (1.13)	101.6 (4.00)	127.8 (5.03)	52.6 (2.07)	64.0 (2.52)	9.5 (0.38)	10-24 UNC
V*502SS6	3/8"	15/16"	12.7 (0.50)	28.6 (1.13)	101.6 (4.00)	127.8 (5.03)	52.6 (2.07)	64.0 (2.52)	9.5 (0.38)	10-24 UNC
V*502SS8	1/2"	1-1/16"	12.7 (0.50)	28.6 (1.13)	101.6 (4.00)	130.3 (5.13)	57.7 (2.27)	67.3 (2.65)	12.7 (0.50)	10-24 UNC
V*502SS12	3/4"	1-3/8"	22.2 (0.88)	34.9 (1.38)	127.0 (5.00)	169.4 (6.67)	85.1 (3.35)	87.9 (3.46)	20.1 (0.79)	10-24 UNC
V*502SS16	1"	1-5/8"	22.2 (0.88)	34.9 (1.38)	127.0 (5.00)	172.0 (6.77)	89.9 (3.54)	95.0 (3.74)	25.4 (1.00)	10-24 UNC
V*502SS20	1-1/4"	2"	25.4 (1.00)	38.1 (1.50)	177.8 (7.00)	228.6 (9.00)	101.6 (4.00)	115.6 (4.55)	31.8 (1.25)	1/4-20 UNC
V*502SS24	1-1/2"	2-3/8"	25.4 (1.00)	38.1 (1.50)	177.8 (7.00)	182.6 (7.19)	111.3 (4.38)	137.7 (5.42)	38.1 (1.50)	1/4-20 UNC
V*502SS32	2"	3"	25.4 (1.00)	38.1 (1.50)	177.8 (7.00)	247.7 (9.75)	139.7 (5.50)	144.3 (5.68)	50.8 (2.00)	1/4-20 UNC

Locking handle parts: For use with 5/16" diameter shank lock

General Description

Series 590 low pressure 90° ball valves provide total shut-off capability for services up to 17 Bar (250 PSI).

Operation

A quarter turn of the handle is on or off. Ball valves are not intended for use as a throttling valve. Attempting to use it in these applications may result in premature seal failure and/or inability to turn the valve handle.

Features

- Ball Valve bodies are machined from high quality CA377 forgings which provide extended service life and resist failure caused by severe temperature conditions.
- Highly inert PTFE seats and seals provide resistance to chemical corrosion.
- Blowout proof stem design, chrome plated brass ball and a special design handle enable increased turn and leverage for ease of opening and closing.

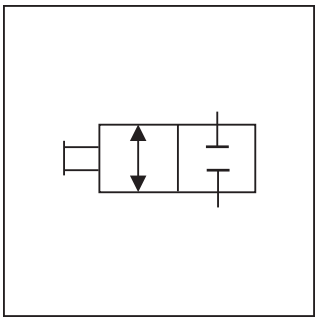

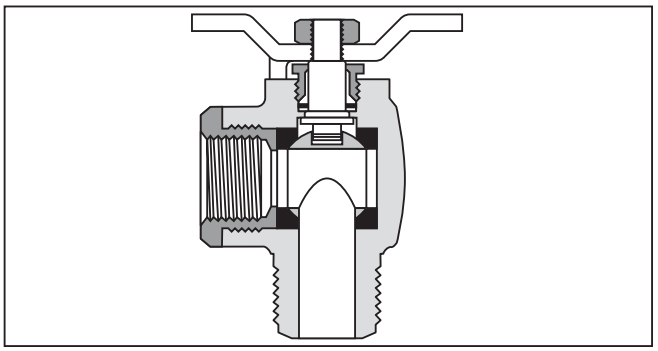

Specifications

Working Pressure	17 Bar (250 PSI)

Ordering Information

V — Style

[ ] — Type

Code	Description
590	90° Male/Female NPT Ports
591	90° Male/Male NPT Ports

P — Material

Code	Description
P	Brass

[ ] — Size

Code	Size
4	1/4" NPT
6	3/8" NPT
8	1/2" NPT

[ ] — Design Series

NOTE: Not required when ordering.

Performance Curve

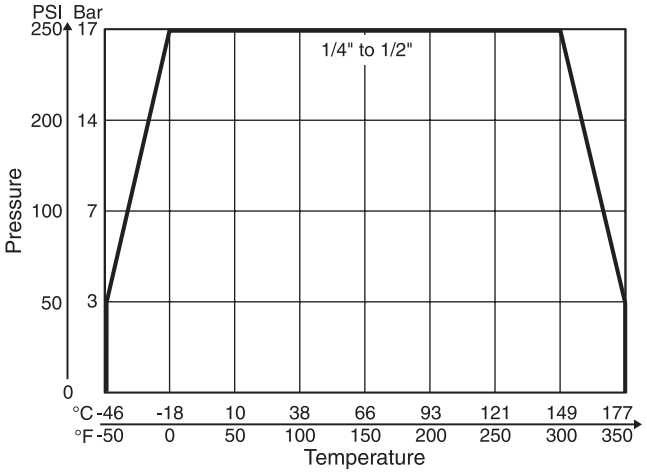

3300-ballvalves.indd, ddp

Parker Hannifin Corporation
Hydraulic Valve Division
Elyria, Ohio, USA

Model V590P

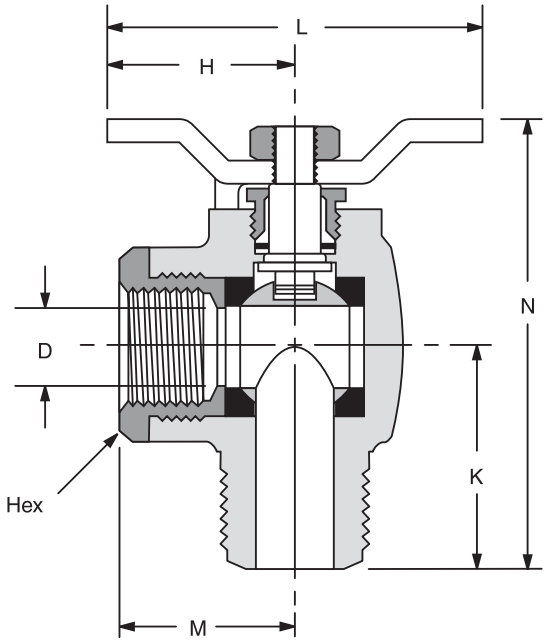

Part Number	Pipe Thread	Hex	Dimensions mm (in)					D Flow Ø
			H	K	L	M	N	
90° Flow, Male-Female Pipe Ends V590P								
V590P-4	1/4"	15/16"	31.8 (1.25)	27.4 (1.08)	63.5 (2.50)	25.4 (1.00)	61.5 (2.42)	9.5 (0.375)
V590P-6	3/8"	15/16"	31.8 (1.25)	27.7 (1.09)	63.5 (2.50)	25.4 (1.00)	61.7 (2.43)	9.5 (0.375)
V590P-8	1/2"	1-1/16"	31.8 (1.25)	33.0 (1.30)	63.5 (2.50)	27.4 (1.08)	67.8 (2.67)	12.7 (0.500)

Model V591P

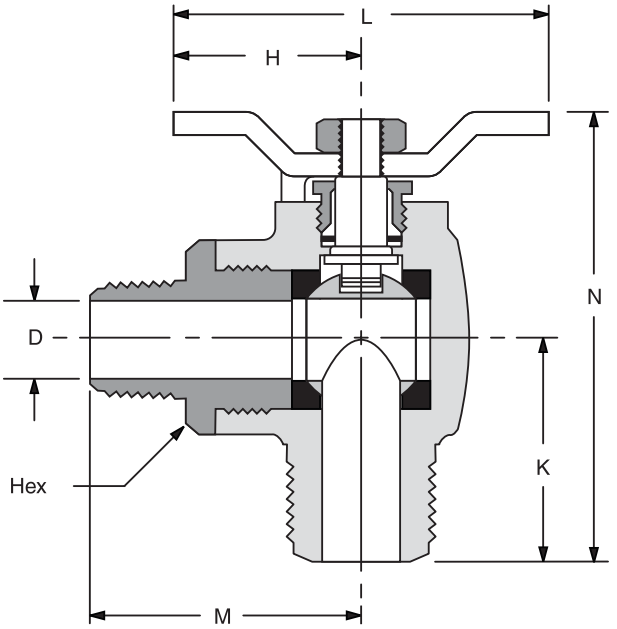

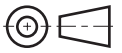

Part Number	Pipe Thread (PTF)	Hex	Dimensions mm (in)					D Flow Ø
			H	K	L	M	N	
90° Flow, Male-Female Pipe Ends V591P								
V591P-4	1/4"	15/16"	31.8 (1.25)	27.4 (1.08)	63.5 (2.50)	39.6 (1.56)	61.5 (2.42)	9.5 (0.375)
V591P-6	3/8"	15/16"	31.8 (1.25)	27.7 (1.09)	63.5 (2.50)	39.6 (1.56)	61.7 (2.43)	9.5 (0.375)
V591P-8	1/2"	1-1/16"	31.8 (1.25)	33.0 (1.30)	63.5 (2.50)	46.7 (1.84)	67.8 (2.67)	12.7 (0.500)

Return to TABLE OF CONTENTS

Offer of Sale

The items described in this document and other documents and descriptions provided by Parker Hannifin Corporation, its subsidiaries and its authorized distributors ("Seller") are hereby offered for sale at prices to be established by Seller. This offer and its acceptance by any customer ("Buyer") shall be governed by all of the following Terms and Conditions. Buyer's order for any item described in its document, when communicated to Seller verbally, or in writing, shall constitute acceptance of this offer. All goods, services or work described will be referred to as "Products".

1. **Terms and Conditions**. Seller's willingness to offer Products, or accept an order for Products, to or from Buyer is subject to these Terms and Conditions or any newer version of the terms and conditions found on-line at www.parker.com/saleterms/. Seller objects to any contrary or additional terms or conditions of Buyer's order or any other document issued by Buyer.

2. **Price Adjustments; Payments**. Prices stated on Seller's quote or other documentation offered by Seller are valid for 30 days, and do not include any sales, use, or other taxes unless specifically stated. Unless otherwise specified by Seller, all prices are F.C.A. Seller's facility (INCOTERMS 2010). Payment is subject to credit approval and is due 30 days from the date of invoice or such other term as required by Seller's Credit Department, after which Buyer shall pay interest on any unpaid invoices at the rate of 1.5% per month or the maximum allowable rate under applicable law.

3. **Delivery Dates; Title and Risk; Shipment**. All delivery dates are approximate and Seller shall not be responsible for any damages resulting from any delay. Regardless of the manner of shipment, title to any products and risk of loss or damage shall pass to Buyer upon placement of the products with the shipment carrier at Seller's facility. Unless otherwise stated, Seller may exercise its judgment in choosing the carrier and means of delivery. No deferment of shipment at Buyers' request beyond the respective dates indicated will be made except on terms that will indemnify, defend and hold Seller harmless against all loss and additional expense. Buyer shall be responsible for any additional shipping charges incurred by Seller due to Buyer's acts or omissions.

4. **Warranty**. Seller warrants that the Products sold hereunder shall be free from defects in material or workmanship for a period of eighteen months from the date of delivery to Buyer. The prices charged for Seller's products are based upon the exclusive limited warranty stated above, and upon the following disclaimer: **DISCLAIMER OF WARRANTY: THIS WARRANTY COMPRISES THE SOLE AND ENTIRE WARRANTY PERTAINING TO PRODUCTS PROVIDED HEREUNDER. SELLER DISCLAIMS ALL OTHER WARRANTIES, EXPRESS AND IMPLIED, INCLUDING DESIGN, MERCHANTABILITY AND FITNESS FOR A PARTICULAR PURPOSE.**

5. **Claims; Commencement of Actions**. Buyer shall promptly inspect all Products upon delivery. No claims for shortages will be allowed unless reported to the Seller within 10 days of delivery. No other claims against Seller will be allowed unless asserted in writing within 30 days after delivery. Buyer shall notify Seller of any alleged breach of warranty within 30 days after the date the defect is or should have been discovered by Buyer. Any action based upon breach of this agreement or upon any other claim arising out of this sale (other than an action by Seller for an amount due on any invoice) must be commenced within 12 months from the date of the breach without regard to the date breach is discovered.

6. **LIMITATION OF LIABILITY.** UPON NOTIFICATION, SELLER WILL, AT ITS OPTION, REPAIR OR REPLACE A DEFECTIVE PRODUCT, OR REFUND THE PURCHASE PRICE. **IN NO EVENT SHALL SELLER BE LIABLE TO BUYER FOR ANY SPECIAL, INDIRECT, INCIDENTAL OR CONSEQUENTIAL DAMAGES ARISING OUT OF, OR AS THE RESULT OF, THE SALE, DELIVERY, NON-DELIVERY, SERVICING, USE OR LOSS OF USE OF THE PRODUCTS OR ANY PART THEREOF, OR FOR ANY CHARGES OR EXPENSES OF ANY NATURE INCURRED WITHOUT SELLER'S WRITTEN CONSENT, EVEN IF SELLER HAS BEEN NEGLIGENT, WHETHER IN CONTRACT, TORT OR OTHER LEGAL THEORY. IN NO EVENT SHALL SELLER'S LIABILITY UNDER ANY CLAIM MADE BY BUYER EXCEED THE PURCHASE PRICE OF THE PRODUCTS.**

7. **User Responsibility**. The user, through its own analysis and testing, is solely responsible for making the final selection of the system and Product and assuring that all performance, endurance, maintenance, safety and warning requirements of the application are met. The user must analyze all aspects of the application and follow applicable industry standards and Product information. If Seller provides Product or system options, the user is responsible for determining that such data and specifications are suitable and sufficient for all applications and reasonably foreseeable uses of the Products or systems.

8. **Loss to Buyer's Property**. Any designs, tools, patterns, materials, drawings, confidential information or equipment furnished by Buyer or any other items which become Buyer's property, will be considered obsolete and may be destroyed by Seller after two consecutive years have elapsed without Buyer ordering the items manufactured using such property. Seller shall not be responsible for any loss or damage to such property while it is in Seller's possession or control.

9. **Special Tooling**. A tooling charge may be imposed for any special tooling, including without limitation, dies, fixtures, molds and patterns, acquired to manufacture Products. Such special tooling shall be and remain Seller's property notwithstanding payment of any charges by Buyer. In no event will Buyer acquire any interest in apparatus belonging to Seller which is utilized in the manufacture of the Products, even if such apparatus has been specially converted or adapted for such manufacture and notwithstanding any charges paid by Buyer. Unless otherwise agreed, Seller shall have the right to alter, discard or otherwise dispose of any special tooling or other property in its sole discretion at any time.

10. **Buyer's Obligation; Rights of Seller**. To secure payment of all sums due or otherwise, Seller shall retain a security interest in the goods delivered and this agreement shall be deemed a Security Agreement under the Uniform Commercial Code. Buyer authorizes Seller as its attorney to execute and file on Buyer's behalf all documents Seller deems necessary to perfect its security interest.

11. **Improper Use and Indemnity**. Buyer shall indemnify, defend, and hold Seller harmless from any claim, liability, damages, lawsuits, and costs (including attorney fees), whether for personal injury, property damage, patent, trademark or copyright infringement or any other claim, brought by or incurred by Buyer, Buyer's employees, or any other person, arising out of: (a) improper selection, improper application or other misuse of Products purchased by Buyer from Seller; (b) any act or omission, negligent or otherwise, of Buyer; (c) Seller's use of patterns, plans, drawings, or specifications furnished by Buyer to manufacture Product; or (d) Buyer's failure to comply with these terms and conditions. Seller shall not indemnify Buyer under any circumstance except as otherwise provided.

12. **Cancellations and Changes**. Orders shall not be subject to cancellation or change by Buyer for any reason, except with Seller's written consent and upon terms that will indemnify, defend and hold Seller harmless against all direct, incidental and consequential loss or damage. Seller may change product features, specifications, designs and availability with notice to Buyer.

13. **Limitation on Assignment**. Buyer may not assign its rights or obligations under this agreement without the prior written consent of Seller.

14. **Force Majeure**. Seller does not assume the risk and shall not be liable for delay or failure to perform any of Seller's obligations by reason of circumstances beyond the reasonable control of Seller (hereinafter "Events of Force Majeure"). Events of Force Majeure shall include without limitation: accidents, strikes or labor disputes, acts of any government or government agency, acts of nature, delays or failures in delivery from carriers or suppliers, shortages of materials, or any other cause beyond Seller's reasonable control.

15. **Waiver and Severability**. Failure to enforce any provision of this agreement will not waive that provision nor will any such failure prejudice Seller's right to enforce that provision in the future. Invalidation of any provision of this agreement by legislation or other rule of law shall not invalidate any other provision herein. The remaining provisions of this agreement will remain in full force and effect.

16. **Termination**. Seller may terminate this agreement for any reason and at any time by giving Buyer thirty (30) days written notice of termination. Seller may immediately terminate this agreement, in writing, if Buyer: (a) commits a breach of any provision of this agreement (b) appointments a trustee, receiver or custodian for all or any part of Buyer's property (c) files a petition for relief in bankruptcy on its own behalf, or by a third party (d) makes an assignment for the benefit of creditors, or (e) dissolves or liquidates all or a majority of its assets.

17. **Governing Law**. This agreement and the sale and delivery of all Products hereunder shall be deemed to have taken place in and shall be governed and construed in accordance with the laws of the State of Ohio, as applicable to contracts executed and wholly performed therein and without regard to conflicts of laws principles. Buyer irrevocably agrees and consents to the exclusive jurisdiction and venue of the courts of Cuyahoga County, Ohio with respect to any dispute, controversy or claim arising out of or relating to this agreement.

18. **Indemnity for Infringement of Intellectual Property Rights**. Seller shall have no liability for infringement of any patents, trademarks, copyrights, trade dress, trade secrets or similar rights except as provided in this Section. Seller will defend and indemnify Buyer against allegations of infringement of U.S. patents, U.S. trademarks, copyrights, trade dress and trade secrets ("Intellectual Property Rights"). Seller will defend at its expense and will pay the cost of any settlement or damages awarded in an action brought against Buyer based on an allegation that a Product sold pursuant to this Agreement infringes the Intellectual Property Rights of a third party. Seller's obligation to defend and indemnify Buyer is contingent on Buyer notifying Seller within ten (10) days after Buyer becomes aware of such allegations of infringement, and Seller having sole control over the defense of any allegations or actions including all negotiations for settlement or compromise. If a Product is subject to a claim that it infringes the Intellectual Property Rights of a third party, Seller may, at its sole expense and option, procure for Buyer the right to continue using the Product, replace or modify the Product so as to make it noninfringing, or offer to accept return of the Product and return the purchase price less a reasonable allowance for depreciation. Notwithstanding the foregoing, Seller shall have no liability for claims of infringement based on information provided by Buyer, or directed to Products delivered hereunder for which the designs are specified in whole or part by Buyer, or infringements resulting from the modification, combination or use in a system of any Product sold hereunder. The foregoing provisions of this Section shall constitute Seller's sole and exclusive liability and Buyer's sole and exclusive remedy for infringement of Intellectual Property Rights.

19. **Entire Agreement**. This agreement contains the entire agreement between the Buyer and Seller and constitutes the final, complete and exclusive expression of the terms of sale. All prior or contemporaneous written or oral agreements or negotiations with respect to the subject matter are herein merged.

20. **Compliance with Law, U. K. Bribery Act and U.S. Foreign Corrupt Practices Act**. Buyer agrees to comply with all applicable laws and regulations, including both those of the United Kingdom and the United States of America, and of the country or countries of the Territory in which Buyer may operate, including without limitation the U. K. Bribery Act, the U.S. Foreign Corrupt Practices Act ("FCPA") and the U.S. Anti-Kickback Act (the "Anti-Kickback Act"), and agrees to indemnify and hold harmless Seller from the consequences of any violation of such provisions by Buyer, its employees or agents. Buyer acknowledges that they are familiar with the provisions of the U. K. Bribery Act, the FCPA and the Anti-Kickback Act, and certifies that Buyer will adhere to the requirements thereof. In particular, Buyer represents and agrees that Buyer shall not make any payment or give anything of value, directly or indirectly to any governmental official, any foreign political party or official thereof, any candidate for foreign political office, or any commercial entity or person, for the purpose of influencing such person to purchase products or otherwise benefit the business of Seller.

02/12

Return to TABLE OF CONTENTS

Parker Safety Guide for Selecting and Using Hydraulic Valves and Related Accessories

WARNING: Failure or improper selection or improper use of Parker Hydraulic Valve Division (HVD) Valves or related accessories ("Products") can cause death, personal injury and property damage. Possible consequences of failure or improper use of these Products include but are not limited to:

- Valves or parts thereof thrown off at high speed
- High velocity fluid discharge
- Explosion or burning of the conveyed fluid
- Contact with suddenly moving or falling objects controlled by the Valve
- Injections by high-pressure fluid discharge
- Contact with fluid that may be hot, cold, toxic or otherwise injurious
- Injuries resulting from injection, inhalation or exposure to fluids
- Injury from handling a heavy item (dropped, awkward lift)
- Electric shock from improper handling of solenoid connections
- Injury from slip or fall on spilled or leaked fluid

Before selecting or using any of these Products, it is important that you read and follow the instructions below. In general, the Products are not approved for in-flight aerospace applications. Consult the factory for the few that are FAA approved.

1.0 GENERAL INSTRUCTIONS

1.1 **Scope**: This safety guide provides instructions for selecting and using (including assembling, installing and maintaining) these Products. For convenience all items in this guide are called "Valves". This safety guide is a supplement to and is to be used in conjunction with the specific Parker catalogs for the specific Valves and/or accessories being considered for use. See item 1.6 below for obtaining those catalogs.

1.2 **Fail-Safe:** Valves can and do fail without warning for many reasons. Design all systems and equipment in a fail-safe mode, so that failure of the Valve or Valve Assembly will not endanger persons or property.

1.3 **Safety Devices:** Never disconnect, override, circumvent or otherwise disable any safety lockout on any system whether powered by HVD Valves or any motion control system of any manufacturer. (e.g. Automatic shut-off on a riding lawn mower should the operator get out of the seat).

1.4 **Distribution:** Provide a copy of this safety guide to each person that is responsible for selecting or using HVD Valve Products. Do not select HVD Valves without thoroughly reading and understanding this safety guide as well as the specific Parker catalogs for the Products considered or selected.

1.5 **User Responsibility:** Due the wide variety of operating conditions and applications for Valves, HVD and its distributors do not represent or warrant that any particular Valve is suitable for any specific system. This safety guide does not analyze all technical parameters that must be considered in selecting a product. The user, through its own analysis and testing is solely responsible for:

- Making the final selection of the Valve
- Assuring that the user's requirements are met and that the application presents no health or safety hazards.
- Providing all appropriate health and safety warnings on the equipment on which the Valves are used.
- Assuring compliance with all applicable government and industry standards.

1.6 **Additional Questions:** Call the appropriate Parker technical service department if you have any questions or require any additional information. See the Parker publication for the product being considered or used, or call 1-800-CPARKER, or go to www.parker.com , for the telephone numbers of the appropriate technical service department. For additional copies of this or any other Parker Safety Guide go to www.parker.com and click on the safety button on the opening page. Catalogs and/or catalog numbers for the various HVD Valve Products can be obtained by calling HVD at 440-366-5100. Phone numbers and catalog information is also available on the Parker website, www.parker.com .

2.0 VALVE SELECTION INSTRUCTIONS

2.1 **Pressure:** Valve selection must be made so that the maximum working pressure of the Valve is equal to or greater than the maximum system pressure. Surge, impulse or peak transient pressures in the system must be below the maximum working pressure of the Valve. Surge, impulse and peak pressures can usually be determined by sensitive electrical instrumentation that measures and indicates pressures at millisecond intervals. Mechanical pressure gauges indicate only average pressure and cannot be used to determine surge, impulse or peak transient pressures. Burst pressure ratings if given or known are for manufacturing purposes only and are not an indication that the Product can be used in applications at the burst pressure or otherwise above the maximum working pressure.

2.2 **Temperature:** The fluid temperature must be regulated or controlled so that the operating viscosity of the fluid is maintained at a level specified for the particular Valve product. Such ranges are given in the product catalogs or can be obtained from the appropriate customer service department for the particular Valve product.

2.3 **Fluid Compatibility:** The fluid conveyed in Valves has direct implications on the Valve selection. The fluid must be chemically compatible with the Valve component materials. Elastomer seals, brass, cast iron, aluminum for example all are potentially affected by certain fluids. Additionally, fluid selection affects the performance of various Valves. Considerations relative to fluid selection are outlined in the specific HVD Valve product catalog. Of particular importance is that the fluid be for hydraulic use, contain the proper additives and wear inhibitors. See 1.6 "Additional Questions" above for information to obtain such HVD catalogs.

2.4 **Changing Fluids:** If a system requires a different fluid, it should be done with the guidance in number 2.3 above. Additionally, it may be necessary to flush the system (including the Valves) to remove any of the previous fluid. Consult the Parker Valve Division for guidance.

2.5 **Size:** Transmission of power by means of pressurized fluid varies with pressure and rate of flow. The size of the components must be adequate to keep pressure losses to a minimum and avoid damage due to heat generation or excessive fluid velocity.

2.6 **Placement:** Installation of Valves must take into account the orientation of the Valve and the proximity of the Valve to other parts of the system. This includes but is not limited to closeness to hot and cold areas, access for servicing and operation as well as orientation for proper connectors.

2.7 **Ports:** Connection of Valves in systems can be by threaded ports, sub-base surfaces, flanges and manifolds. In all cases, the proper fitting, surface or mounting hardware must be selected to properly seal and contain the system fluid so as to avoid the adverse conditions listed in the initial warning box above. Specifically, if using threaded ports, the designer must make sure that the mating fitting is of the compatible thread. Also, the instructions provided by the connector hardware supplier must be read and understood so as to properly assemble the connector. The Parker Safety Guide for using Hose, Tubing and Fittings and Related Accessories is but one reference to this end.

2.8 **Environment:** Care must be taken to insure that the Valve and Valve Assemblies are either compatible with or protected from the environment (that is, surrounding conditions) to which they are exposed. Environmental conditions including but not limited to ultraviolet radiation, sunlight, heat, ozone, moisture, water, salt water, chemicals and air pollutants can cause degradation and premature failure.

2.9 **Electric Power:** For Valves requiring electric power for control, it is imperative that the electricity be delivered at the proper voltage, current and wattage requirements. To obtain the proper control requirements please refer to the respective Parker product catalog for the specific Valve that is intended for use. If further guidance is required, call the appropriate technical service department identified in the respective Parker product catalog.

2.10 **Specifications and Standards:** When selecting Valves, government, industry and Parker specifications and recommendations must be reviewed and followed as applicable.

2.11 **Accessories:** All accessories used in conjunction with any Parker Valve product must be rated to the same requirements of the Valve including but not limited to pressure, flow, material compatibility, power requirements. All of these items must be examined as stated in the "VALVE INSTALLATION INSTRUCTIONS" paragraph 3.0.

(continued on next page)

Return to TABLE OF CONTENTS

3.0 VALVE INSTALLATION INSTRUCTIONS

3.1 **Component Inspection:** Prior to use, a careful examination of the Valve(s) must be performed. The Valve intended for use must be checked for correct style, size, catalog number and external condition. The Valve must be examined for cleanliness, absence of external defects or gouges, cracked or otherwise deformed parts or missing items. The mounting surface or port connections must be protected and free of burrs, scratches, corrosion or other imperfections. Do NOT use any item that displays any signs of nonconformance. In addition, any accessory including but not limited to fittings, bolt kits, hoses, sub bases, manifolds, and electrical connectors must be subjected to the same examination.

3.2 **Handling Valves:** Many Valves whether HVD Valves or of another manufacturer can be large, bulky or otherwise difficult to handle. Care must be taken to use proper lifting techniques, tools, braces, lifting belts or other aids so as not to cause injury to the user, any other person or to property.

3.3 **Filtration:** Fluid cleanliness is a necessity in any hydraulic system. Fluid filters must be installed and maintained in the system to provide the required level of fluid cleanliness. Filters can be placed in the inlets, pressure lines and return lines. The level of cleanliness required is specified in the HVD product catalog for the specific Valve(s) selected or intended for use. For additional information on Filter selection contact Parker Filter Division at 800-253-1258 or 419-644-4311.

3.4 **Servo Valves:** Application of Servo Valves in general requires knowledge and awareness of "closed loop control theory" and the use of electronic controls for successful and safe operation. Individuals who do not have such experience or knowledge must gain training before use of such Products. Parker offers both classroom training as well as manuals to assist in gaining this knowledge. These aids can be obtained by contacting Hydraulic Valve Division at 440-366-5100, calling the general Parker help line 800-CPARKER or going to the Parker web site at www.parker.com.

3.5 **Accessory Ratings:** All accessories used in combination with the selected or intended Valve product must be rated and compatible with the selected Valve. Specifically, the items must be of equal or greater rating including but not limited to pressure, flow, power, size, port style, thread connectors and material.

3.6 **Connection Styles:** It is the responsibility of the user of the Parker product to properly select connectors and accessories that match the connections on the sub plate, Valve, flange or threaded connection or manifold. It is also the responsibility of the installer to possess adequate skill and knowledge including but not limited to thread preparation, torque technique, hose assembly and inspection, tube preparation and assembly, and fitting installation. Parker Tube Fitting Division (www.parker.com/tfd) catalog 4300 and Parker Hose Products (www.parkerhose.com) catalog 4400 describe some basic technical information relative to proper fitting assembly.

3.7 **Electrical Connections:** All electrical connections must be made to the applicable codes and local safety requirements.

3.8 **Gauges and Sensors:** The user must install sufficient gauges and sensors in the system so as to be able to determine the condition of the system. This includes but is not limited to pressure gauges, flow meters, temperature sensors and site gauges. These are of utmost importance should removal or disassembly of a Valve, portion of a Valve or portion of the system become necessary. Refer to "VALVE MAINTENANCE AND REPLACEMENT INSTRUCTIONS" for details and especially item 4.8.

3.9 **System Checkout:** Once installed, the Valve installation must be tested to insure proper operation and that no external leakage exists. All safety equipment must be in place including but not limited to safety glasses, helmets, ear protection, splash guards, gloves, coveralls and any shields on the equipment. All air entrapment must be eliminated and the system pressurized to the maximum system pressure (at or below the Valve maximum working pressure) and checked for proper function and freedom from leaks. Personnel must stay out of potentially hazardous areas while testing and using.

4.0 VALVE MAINTENANCE AND REPLACEMENT INSTRUCTIONS

4.1 **Maintenance Program:** Even with proper installation, Valves and Valve System life may be significantly reduced without a continuing maintenance program. The severity of the application and risk potential must determine the frequency of the inspection and the replacement of the Products so that Products are replaced before any failure occurs. A maintenance program must be established and followed by the user and, at a minimum, must include instructions 4.2 through 4.10. An FMEA (Failure Mode and Effects Analysis) is recommended in determining maintenance requirements.

4.2 **Visual Inspection-Valves:** Any of the following conditions require immediate shut down and replacement of the Valve.

- Evidence that the Valve is in partial dis-assembly.
- Visible crack or suspicion of a crack in the Valve housing or bent, cracked or otherwise damaged solenoid.
- Missing or partially extending drive pin on a flow control knob.
- Missing, loose components, obstructions or other condition impeding the motion or function of the manual knob, lever, foot pedal or other mechanical operator of a hydraulic Valve.
- Any evidence of burning or heat induced discoloration.
- Blistered, soft, degraded or loose cover of any kind.
- Loose wire or electrical connector.

4.3 **Visual Inspection-Other:** The following conditions must be tightened, repaired, corrected or replaced as required.

1. Fluid on the ground must be cleaned immediately. Also, the source of the fluid must be determined prior to running the equipment again.
2. Leaking port or excessive external dirt build-up.
3. System fluid level is too low or air is entrapped or visible in the reservoir.
4. Equipment controlled by the Valve or Valve assembly has been losing power, speed, efficiency

4.4 **Filter Maintenance:** System filters must be maintained and kept in proper working order. The main service requirement is periodic replacement of the filter element or screen. Contact Parker Filter Division at 800-253-1258 or 419-644-4311 for further filter maintenance details.

4.5 **Functional Test:** See "System Checkout" number 3.9 above in "VALVE INSTALLATION INSTRUCTIONS".

4.6 **Replacement Intervals:** Valves and Valve Systems will eventually age and require replacement. Seals especially should be inspected and replaced at specific replacement intervals based on previous experience, government or industry recommendations, or when failures could result in unacceptable downtime, damage or injury risk. At a minimum seals must be replaced whenever service is rendered to a Valve product.

4.7 **Adjustments, Control Knobs, and Other Manual Controls:** System Pressure and Flow are typically adjusted by knobs and/or handles. A set-screw or lock-nut secures the adjustment device so as to maintain the desired setting. This set-screw or lock-nut must first be loosened prior to making any adjustments and re-tightened after adjustment on the HVD Valve. All adjustments must be made in conjunction with pressure gauges and/or flow meters (or by watching the speed of the actuator in the case of setting flow only). See paragraph "Gauges and Sensors" above in the section "VALVE INSTALLATION INSTRUCTIONS'. Under no circumstances should any control knob, adjustment stem, handle, foot pedal or other actuating device be forced beyond the mechanical stop(s) on the Valve. For example, the Parker Safety Notice Bulletin **HY14-3310-B1/US** for HVD Colorflow Valves specifically restricts the adjustment torque to "hand adjust" or "less than 10 ft/lbs" if it cannot be adjusted by hand. Failure to adhere to this may force the knob beyond the stop point allowing it to be ejected at high speed resulting in death, personal injury and property damage. For complete safety instructions on HVD Colorflow Valves, copies of Safety Notice **Bulletin HY14-3310-B1/US** can be obtained directly from the Hydraulic Valve Division at 440-366-5100 or from the Parker web site at www.parker.com by selecting the "Safety" button. Parker help line 800-CPARKER is on call 24/7 as well should there be any question about the use of a HVD Valve. Additionally, when making adjustments, always adjust the Valve with all parts of your body to the side of the Valve (that is, the knob is not pointing toward you or anyone else).

4.8 **High pressure Warning:** Hydraulic power is transmitted by high-pressure fluids through hoses, fittings and valves, pumps and actuators. This condition can be dangerous and potentially lethal and, therefore, extreme caution must be exercised when working with fluids under pressure. From time to time, hoses, Valves, tubes or fittings fail if they are not replaced at proper time intervals. Typically these failures are the result of some form of misapplication, abuse, wear, or failure to perform proper maintenance. When such failure occurs, generally the high pressure fluid inside escapes in a stream which may or may not be visible to the user. Under no circumstances should the user attempt to locate the leak by "feeling" with their hands or any other part of their body. High-pressure fluids can and will penetrate the skin and cause severe tissue damage and possible loss of limb or life. Even seemingly minor hydraulic fluid injection injuries must be treated immediately by a physician with knowledge of the tissue damaging properties of hydraulic fluid.

If a hose, tube, fitting or Valve failure occurs, immediately shut down the equipment and leave the area until pressure has been completely released from the system. Simply shutting down the pump may or may not eliminate the pressure in the system. It may take several minutes or even hours for the pressure to be relieved so that the leak area can be examined safely. Once the pressure has been reduced to zero, the suspected leaking item can be taken off the equipment and examined. It must always be replaced if a failure has occurred. Never attempt to patch or repair a connector (especially a hose) or Valve that has failed. Consult the nearest Parker distributor or the appropriate Parker division for component replacement information. Never touch or examine a failed hydraulic component unless it is obvious that the item no longer contains fluid under pressure.

Notes

Return to TABLE OF CONTENTS

Return to TABLE OF CONTENTS

Extensive Hydraulic Product Offering

Accumulators

Piston, bladder and diaphragm type accumulators, gas bottles and KleenVent reservoir isolators.

www.parker.com/accumulator

Compact Hydraulics

Self-contained with a motor, gear pump, reservoir, internal valving, load hold checks and relief valves.

www.parker.com/oildyne

Cylinders

Standard and custom hydraulic cylinders for industrial and mobile applications.

www.parker.com/hydcyl

Electronics/Remote Controls

Parker's unique IQAN approach combines sturdy, well-tested hardware with intelligent, flexible computing power.

www.parker.com/iqan

Filtration

Pressure and return line filters enhances machine life, reduces maintenance and lowers costs.

www.parker.com/hydraulicfilter

Integrated Hydraulic Circuits

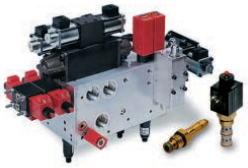

Solutions for complex circuits that include threaded cartridge valves integrated into a single manifold.

www.parker.com/hcs

Motors

Full line of high and low speed motors provides power up to 15,000 in-lbs of torque.

www.parker.com/pumpmotor

Power Take Off

Parker Chelsea leads the industry for engineering, innovation and performance in auxiliary power systems.

www.parker.com/chelsea

Power Units

The most complete line of standard, pre-engineered, cataloged hydraulic power units in the industry.

www.parker.com/pumpmotor

Pumps

Broad line of energy-efficient hydraulic pumps that includes piston, vane and gear pumps.

www.parker.com/mobpump

Rotary Actuator

Industry leader in the design and manufacture of hydraulic rack and pinion, and vane style rotary actuators.

www.parker.com/actuator

Valves and Controls

Hydraulic valves for virtually every hydraulic equipment application, from simple to precise control.

www.parker.com/hydraulicvalve

Covering the Industrial and Mobile markets, each catalog is paired with an interactive DVD. Call for your comprehensive guides today. 1-800-C-Parker.

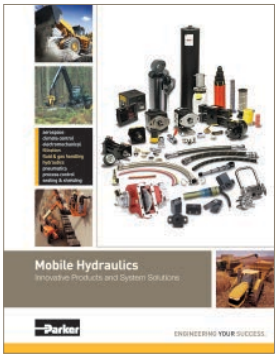

Mobile Hydraulics
Bulletin HY19-1012/US

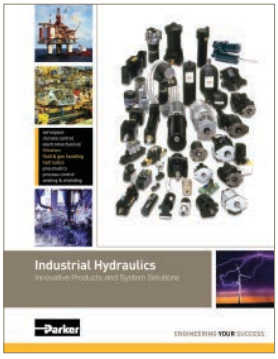

Industrial Hydraulics
Bulletin HY01-1001/US

Return to TABLE OF CONTENTS

Parker Hydraulics International Sales Offices

North America

Hydraulics Group Headquarters
6035 Parkland Boulevard
Cleveland, OH 44124-4141 USA
Tel: 216-896-3000
Fax: 216-896-4031

Parker Canada Division
160 Chisholm Drive
Milton, Ontario, L9T 3G9 Canada
Tel: 905-693-3000
Fax: 905-876-1958

Mexico
Parker Hannifin de México
Industrial Hydraulic Sales
Eje Uno Norte No. 100
Parque Industrial Toluca 2000
Toluca, Edo. de Mexico CP 50100
Tel: 52 72 2275 4200
Fax: 52 72 2279 9308

Europe

Hydraulics Group Headquarters
La Tuilière 6
CH-1163 Etoy, Switzerland
Tel: 41 21 821 8500
Fax: 41 21 821 8580

Latin America

Parker Hannifin Ind. e Com. Ltda
Hydraulics Division
Av. Frederico Ritter, 1100
94930-000 Cachoeirinha RS, Brazil
Tel: 55 51 3470 9144
Fax: 55 51 3470 9215

Parker Hannifin Argentina S.A.I.C.
Stephenson 2711
1667-Tortuguitas-Malvinas Argentinas
Pcia. de Buenos Aires, Argentina
Tel: 54 3327 44 4129
Fax: 54 3327 44 4199

Pan American Division
7400 NW 19th Street, Suite A
Miami, FL 33126 USA
Tel: 305-470-8800
Fax: 305-470-8808

Industrial Sales

Central Region
1042 Maple Avenue
Unit 331
Lisle, IL 60532 USA
Tel: 630-964-0796

Great Lakes Region
6035 Parkland Boulevard
Cleveland, OH 44124-4141 USA
Tel: 216-896-3000
Fax: 216-896-4031

Gulf Region
20002 Standing Cypress Drive
Spring, TX 77379 USA
Tel: 817-473-4431
Fax: 888-227-9454

Southwest Region
700 S. 4th Avenue
Mansfield, TX 76063 USA
Tel: 817-473-4431
Fax: 888-227-9454

Mid Atlantic & Southeast Regions
1225 Old Alpharetta Rd
Suite 290
Alpharetta, GA 30005 USA
Tel: 770-619-9767
Fax: 770-619-9806

Midwest Region
8145 Lewis Road
Minneapolis, MN 55427 USA
Tel: 763-513-3535
Fax: 763-544-3418

Northeast Region
P.O. Box 396
Pine Brook, NJ 07058 USA
Tel: 973-227-2565
Fax: 973-227-2467

Northwest Region
6458 North Basin Avenue
Portland, OR 97217 USA
Tel: 503-283-1020
Fax: 866-611-7308

Pacific and Plains Region
8460 Kass Drive
Buena Park, CA 90621 USA
Tel: 714-228-2509
Fax: 714-228-2511

Mobile Sales

Mobile Sales Organization and Global Sales
850 Arthur Avenue
Elk Grove Village, IL 60007 USA
Tel: 847-258-6200
Fax: 847-258-6299

Asia Pacific

Parker Hannifin Shanghai Ltd.
280 Yunqiao Road,
Jin Qiao Export Processing Zone
Shanghai 201206, China
Tel: 86 21 2899 5000
Fax: 86 21 5834 8975

Parker Hannifin Hong Kong Ltd.
Suites 01-04, 20/F,
Tower 2, The Gateway,
Harbour City, Tsimshatsui,
Hong Kong
Tel: 852 2428 8008
Fax: 852 2480 4256

Parker Hannifin Korea Ltd.
18F KAMCO Yangjae Tower
949-3 Dogok1-dong, Gangnam-gu
Seoul, 135-860, Korea
Tel: 82 2 559 0408
Fax: 82 2 556 8187

Parker Hannifin India Pvt Ltd.
Plot No. EL-26, MIDC,
TTC Industrial Area
Mahape, Navi Mumbai, 400 709, India
Tel: 91 22 6513 7081
Fax: 91 22 2768 6841

Parker Hannifin Australia
Parker Hannifin Pty Ltd.
9 Carrington Road
Castle Hill, NSW 2154, Australia
Tel: 612 9634 7777
Fax: 612 9842 5111

South Africa

Parker Hannifin Africa Pty Ltd
10 Berne Avenue
Aeroport
Kempton Park 1620,
Republic of South Africa
Tel: 19 610 700
Fax: 13 927 213

© 2012 Parker Hannifin Corporation. All rights reserved.

Catalog HY14-3300/US,
7.5M, 5/12, ST

Parker Hannifin Corporation
Hydraulic Valve Division
520 Ternes Avenue
Elyria, Ohio 44035 USA
Tel: 440-366-5100
Fax: 440-366-5253
www.parker.com/hydraulicvalve

Your Local Authorized Parker Distributor